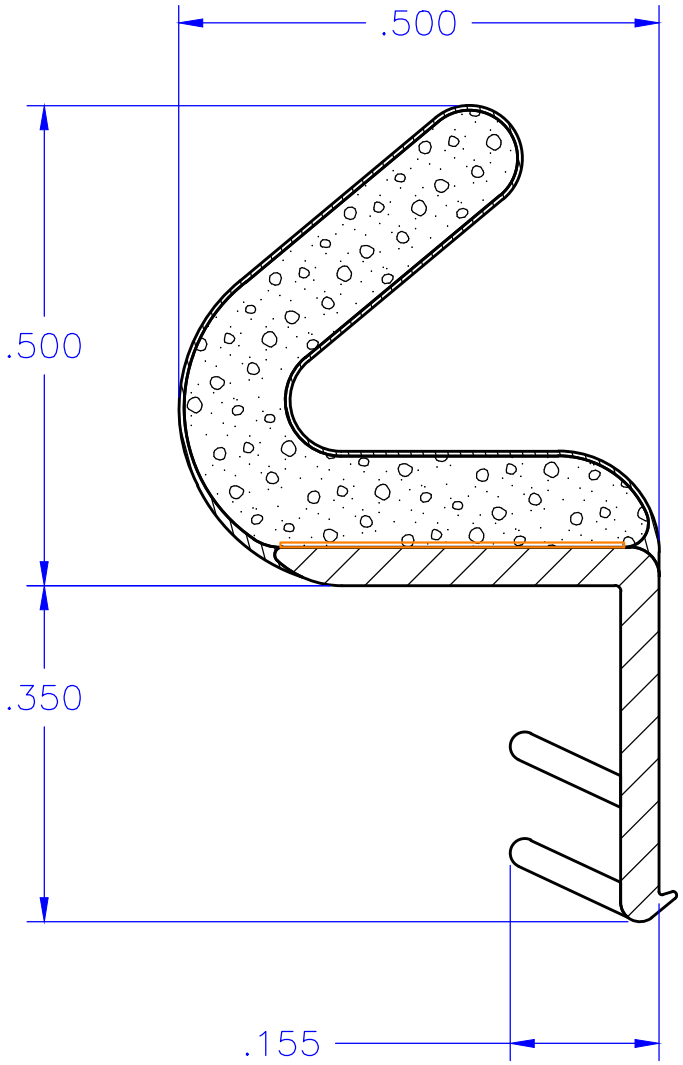

REFER TO CAD DRAWING FOR ALL DIMENSIONS NOT FULLY CONSTRAINED.

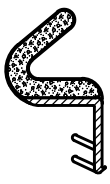

1:1 ACTUAL SIZE

AmesburyTruth™
Engineered Solutions. Trusted Results.

INTERPRET PER: ASME Y14.5M–2009

UNITS: INCH

TOLERANCE UNLESS OTHERWISE SPECIFIED

DRAWING TITLE: – CUSTOMER PAGE –

DRAWN BY: JA

CHECKED BY: DA

SCALE: 5:1

SHEET: 1 OF 1

CAD TYPE: AUTOCAD

SIZE: A

DRAWING #: 12002

REV: 11

THIRD ANGLE PROJECTION

KC CRITICAL DIMENSIONS

THE INFORMATION CONTAINED IN THIS DRAWING IS CONFIDENTIAL AND PROPRIETARY. THIS DRAWING IS NOT TO BE COPIED OR REPRODUCED IN WHOLE OR IN PART WITHOUT EXPRESS WRITTEN CONSENT.

PRINTED ON: May 11, 2021